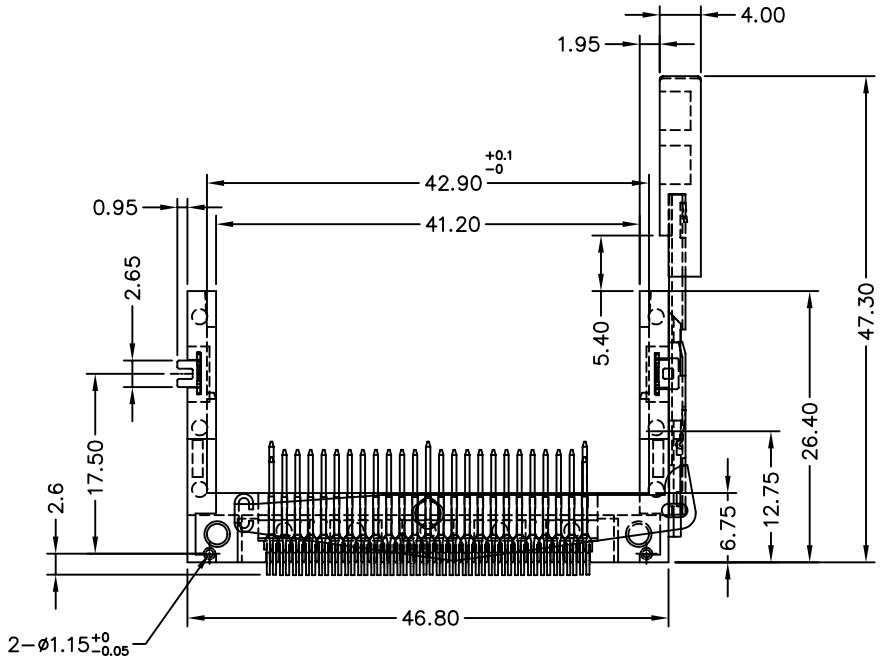

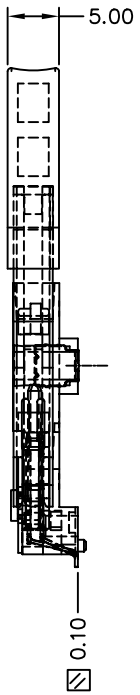

NOTE:

A. Material:
1. Housing : LCP 30% G.F. , UL94−V0 rated
2. Contact : Copper allpy
3. Pad : Brass
4. Rotating arm : Stainless steel t=0.40
5. Push bar : Stainless steel t=0.30
6. Button : PBT 30% G.F. , UL94−V0 rated

B. Plating
1. Contact : Underplating 50u" min Nickel,
Contant area 15u" AU over Nickel plated.
Solder tail 100u" min Sn/Pb over Nickel plated.
2. Ped : 100u" min Sn/Pb over 50u" min Nickel plated.

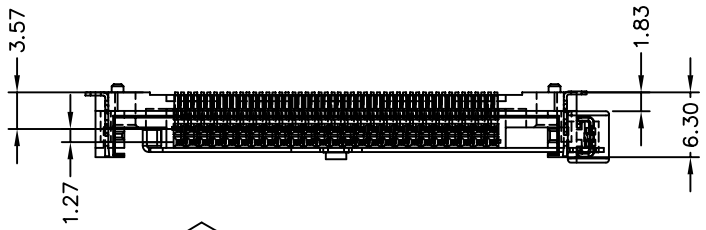

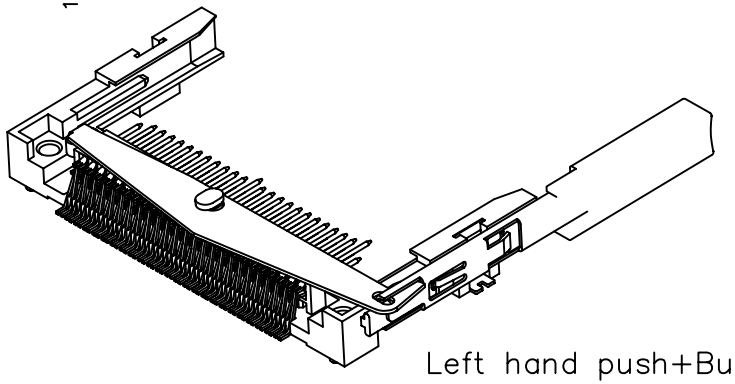

Left hand push+Button

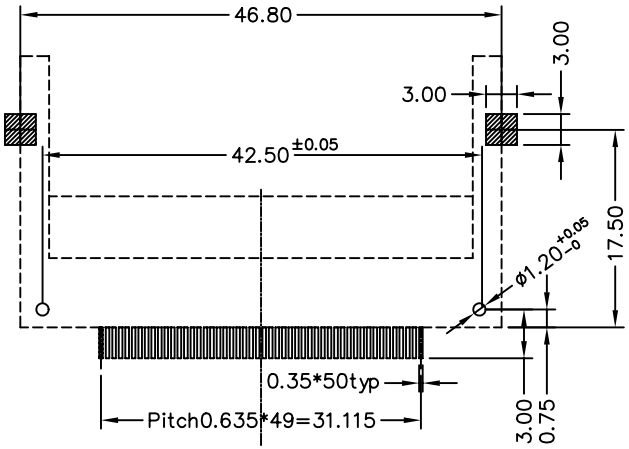

PCB Layout

Dimension L

Pin type	Circuit No.	Dimensions mm
Detect	1,13,38,50	5.0 ± 0.1
General	2 to 12 , 14 to 24 27 to 37 , 39 to 49	4.25 ± 0.1
Power	25 , 26	3.5 ± 0.1

PART NO. CFC-PW222LS-50					
DWG NO. CFC-PW222LS-50	APPROVED BY CY	TOLERANCES ARE	DESCRIP TION:	Compact Flash Card Socket SMT TYPE (Reverse type fit Type II CF Card) Stand Off : 2.1mm & POST L=42.5mm	
FILE NO.	DRAWING BY	.X ±0.125 .XX ±0.050 .XXX±0.010			
SCALE 1 : 1	PROJECTION		AREA	REVISIONS / HK	DATE